(ST4130)M43/400

REVISION RECORD		
REV	DESCRIPTION	DESIGN

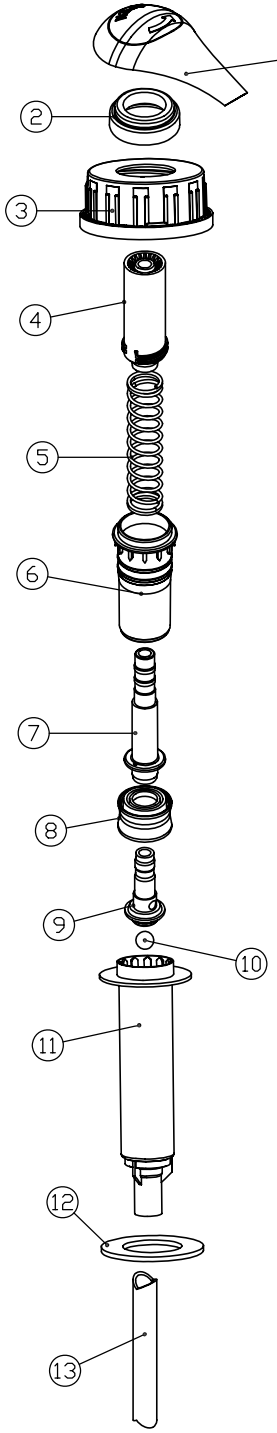

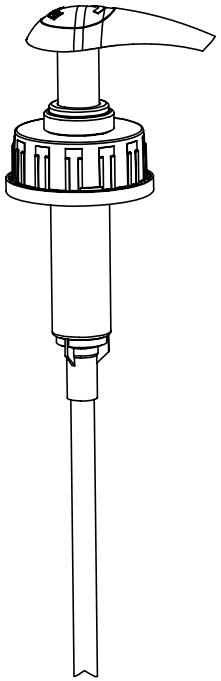

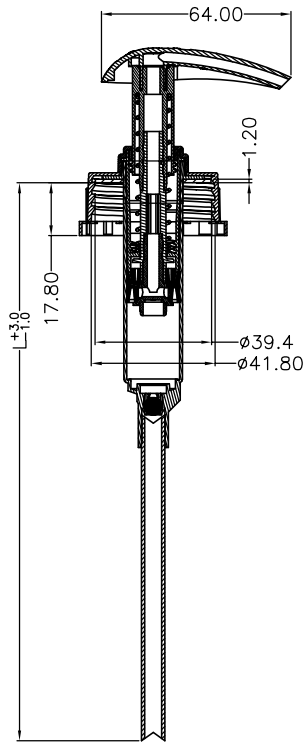

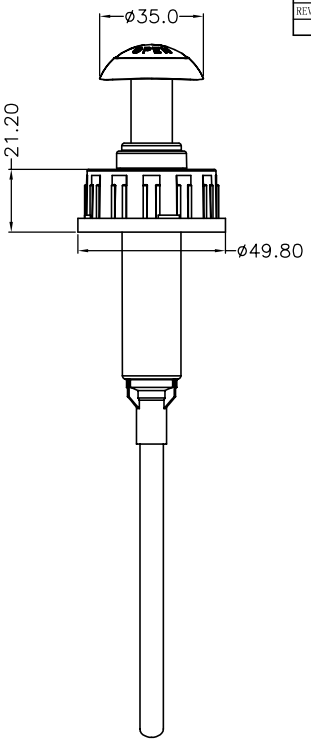

Output:5.5±0.5ML

序号/No.	名称/NAME	图号/DRAWING NO	数量/QT'Y	材料/MATERIAL	重量/WEIGHT	FDA-Nr.
13	Dip tube	TR402/013	1	LDPE		21.177.1520
12	Gasket	ST4130-023	1	PE	0.435g	21.177.1350 21.177.1520 21.178.3297
11	Pump housing	ST4130-024	1	PP/RE420MO	5.45g	21.177.1520
10	Ball valve	ST4130-008	1	Glass	0.28g	CPG 7117.06,07
9	Spring bar	ST4130-004	1	PP/5090T	0.66g	21.177.1520
8	Piston	ST4130-003	1	LLDPE/DFDA7042	1.2g	21.177.1520
7	Piston bar	ST4130-005	1	PP/HKR102	1.23g	21.177.1520
6	Connection cap	ST4130-002	1	PP/5090T	2.15g	21.177.1520
5	Spring	ST4130-011	1	SUS304H	3.08g	21.178.3910
4	Connection rod	ST4130-006	1	PP/HKR102	2.7g	21.177.1520
3	Closure	ST4130-013	1	PP/HKR102	4.82g	21.177.1520
2	Buckle circle	ST4130-009	1	PP/HKR102	0.65g	21.177.1520
1	Actuator	ST4130-010	1	PP/5090T	3.74g	21.177.1520

尺寸划分MM \ 等级	细级	中级	粗级
1-4	±0.05	±0.10	±0.20
4-16	±0.07	±0.20	±0.50
16-63	±0.10	±0.30	±0.70
63-250	±0.20	±0.50	±1.20
250-1000	±0.30	±0.80	±2.00

设计/Design:鲁科科2016.03.16
审核/Examine:
批准/Approval:
材料/Material:
重量/Weight:
数量/Qt'y:

特力工贸 TIRRIT CORPORATION
Fax:+86(574)62760899 Tel:+86(574)62760888
CE14-15, Far East Industry Park, Yuyao, Zhejiang Province, (315400)

ST4130-43/400

图号/DRAWING NO. ST4130-43

系列号/PART NO. ST4130

SCALE:
REV: A
SIZE: A4
SHEET: 1/1

Change in drawing is determined by our company without further notice